Printed Pages: 02 **Subject Code:RAR204/NAR204**

Paper Id: 181276 **Roll No:** | | | | | | | | | | |

BARCH
(SEM II) THEORY EXAMINATION 2018-19
ARCHITECTURAL DESIGN II

Time: 3 Hours ***Total Marks:50***

Notes:

- *Read instructions carefully, attempt accordingly.*
- *Stationary Supplied: Two Cartridge sheets.*
- *Be precise in your answers.*
- *Assume suitable scale. Properly label the drawing*
- *Assume any missing Data.*

SECTION – A

1. Explain with neat sketches **(1 X 5 = 5)**

a. Metric circle
b. Isometric
c. Axonometric
d. Pictorial
e. Cone of vision

2. Write short cuts keys of the followings **(1 X 5 = 5)**

a. Polyline
b. Leader
c. Extend
d. Hatch
e. Arc

SECTION – B

3. Attempt any five questions. All questions carry equal marks **(5X 5=25)**

a. Draw an Isometric view of Cone of height 15cm and radius 5cm
b. Explain Isometric view and write its advantages.
c. A cylindrical block of base, 40 mm diameter and height 60mm, is standing on the H.P with its axis perpendicular to the H.P. Draw its isometric view.
d. Draw isometric view of a frustum of equilateral triangular pyramid of base side 50mm. Overall height of pyramid is 50 mm. pyramid is kept on H.P with axis perpendicular to H.P.
e. What is the purpose and use of perspective drawing?
f. Differentiate between One point and Two-point perspective with example.
g. Explain Installation and Launching of AutoCAD Using Application menus.
h. What is UCS and how we used in AutoCAD.

www.aktuonline.com

SECTION – C

3. Attempt any one questions in your answer booklet. (15x1=15)

a. Draw the perspective view of a pentagonal pyramid, lying on the ground plane on the one of its Triangular faces, the axis being inclined at 30 degree to the picture plane, and a corner of the base touching the picture plane. The station point is 6.5 cm in front of the picture plane, and lies in a central plan which bisects the axis. The horizon is at the level of the top edge of the prism.

b. Draw Two point perspective view of the following object given in figure

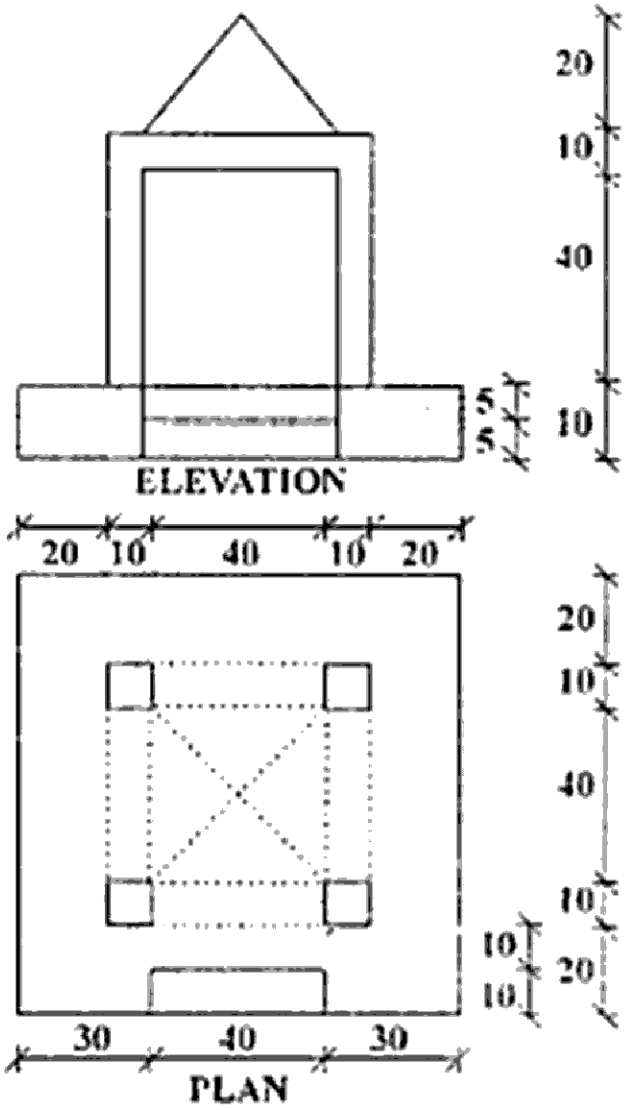

www.aktuonline.com