www.aktuonline.com

**Printed Pages: 02** **Sub Code: RAR203**

**Paper Id:** | 1 | 8 | 1 | 2 | 2 | 3 | **Roll No.** | | | | | | | | | | |

**B. ARCH**
**(SEM II) THEORY EXAMINATION 2017-18**
**Architectural Structure-II**

***Time: 3 Hours*** ***Total Marks: 70***

**Note:** Attempt all Sections. If require any missing data; then choose suitably.

**SECTION A**

**1. Attempt *all* questions in brief. 2 x 7 = 14**

a. Define Perfect Frame.
b. How many members are cut in Method of Section for Truss?
c. Write any two assumptions on made in theory of Torsion.
d. What do you understand by Plane Cement Concrete?
e. What are the boundary conditions of simply supported beam?
f. Write the methods for finding the deflection.
g. Define Axially Loaded Columns.

**SECTION B**

**2. Attempt any *three* of the following: 7 x 3 = 21**

a. Determine the forces in the members of the truss shown in fig.

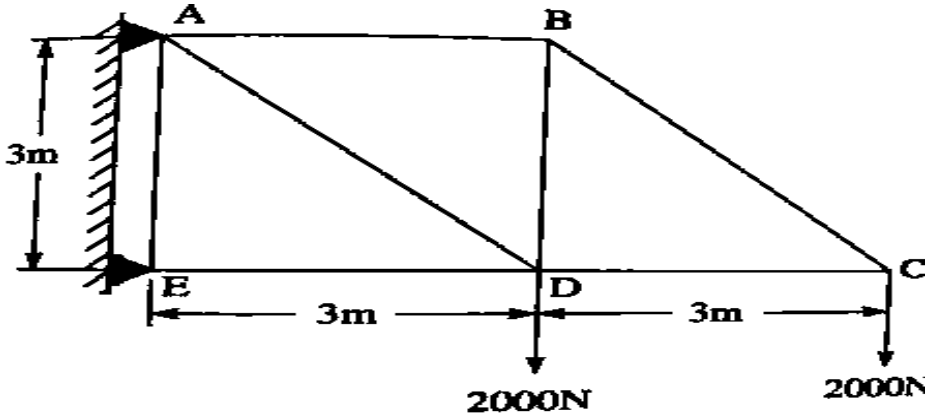


b. What assumptions made in Theory of Torsion?
c. What do you understand by properties of Concrete? Explain any one of them
d. What do you understand by curvature of the bending in beam? And also find the slope
e. What is the Limitations of Euler's Formula?

**SECTION C**

**3. Attempt any *one* part of the following: 7 x 1 = 7**

(a) What conditions are satisfied for analysis of trusses? Explain in brief
(b) Find the forces in members of the truss shown in figure

www.aktuonline.com
http://www.aktuonline.com

www.aktuonline.com

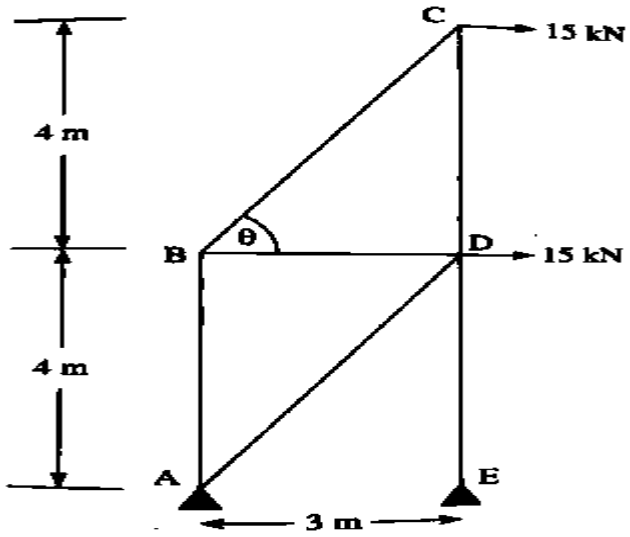


**4. Attempt any *one* part of the following: 7 x 1 = 7**

(a) Define following terms (i) Polar Sectional Modulus (ii) Torsional Rigidity

(b) A shaft consisting of a steel tube of 50 mm outside diameter is to transmit 100 KW at a frequency of 20 HZ. Determine the tube thickness which should be used if the shearing stress is not to exceed 60 MPa.

**5. Attempt any *one* part of the following: 7 x 1 = 7**

(a) What do you understand by Design Mix Concrete?

(b) Define following terms (i) Tensile strength (ii) Modulus of elasticity of Steel

**6. Attempt any *one* part of the following: 7 x 1 = 7**

(a) Determine the Slope and Deflection at point C and B take $E=2x10^5$ MPa, $I=4.8x10^7$ $mm^4$.

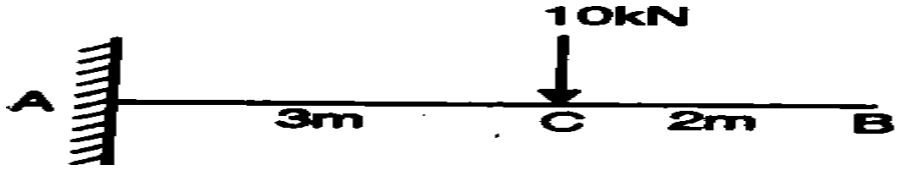


(b) A cantilever of length 2a is carrying a load W at free end and a load W at its centre. Determine Slope and Deflection at free end shown in fig.

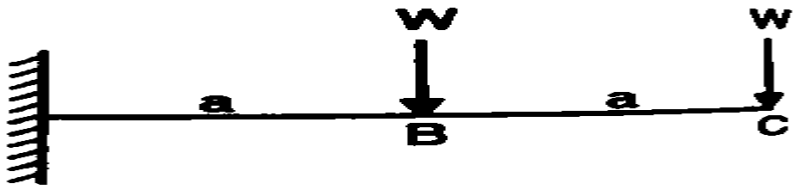


**7. Attempt any *one* part of the following: 7 x 1 = 7**

(a) Define following term for column (i) Eccentric Loading (ii) Middle third rule for Rectangular Column

(b) Calculate the safe compressive load on a Hollow Cast iron column of 200 mm external diameter and 130 mm internal diameter. The column is 8 m long and its one end is fixed and other hinged, F.O.S.=4 , E=105 GPa Use Euler's Equation.

www.aktuonline.com
http://www.aktuonline.com