Printed Pages:02 **Sub Code: MTED-202**

Paper Id: | 2 | 2 | 0 | 2 | 1 | 2 | **Roll No.** | | | | | | | | | | |

M.TECH
(SEM 2nd) THEORY EXAMINATION 2017-18
POWER CONVERTER-II

Time: 3 Hours ***Total Marks: 70***

Note: **1.** Attempt all Sections. If require any missing data; then choose suitably.
2. Any special paper specific instruction.

SECTION A

1. Attempt *all* questions in brief. 2 x 7 = 14

a. Enumerate basic differences between BJT and MOSFET.
b. When chopper is feeding an RLE load, why the current is not constant?
c. Why multiphase chopper preferable in high power circuit?
d. What are the drawbacks of series inverter?
e. How can input DC voltage to an inverter be controlled?
f. What is the role of resistance connected in series with capacitor in snubber circuit?
g. What do understand by secondary breakdown in BJT?

SECTION B

2. Attempt any *three* of the following: 7 x 3 = 21

a. Explain the working principle of IGBT with their switching characteristic.

b. Discuss the advantage of high frequency operation of dc chopper.
In a DC chopper circuit an ideal battery of 100 V feeds a series load of resistance 0.5 Ω and inductance of 1 mH. The device is switch on for 1 ms in an over all period of 3 ms. Find maximum , minimum and average load current , and average load voltage.
c. What is necessity of commutation in a thyristorised dc chopper circuit? Describe with neat circuit diagram and relevant waveforms the working of load commutated DC chopper circuit.
d. Describe with neat circuit diagram second quadrant DC chopper circuit and also draw its the relevant waveforms.
e. Explain the working principle of MOS- controlled thyristor with clear diagram.

SECTION C

3. Attempt any *one* part of the following: 7 x 1 = 7

(a) Describe with neat diagram P-channel depletion-type MOSFET. Also draw its transfer characteristics
(b) A buck-boost regulator has an input voltage of V_s = 12 V. The duty cycle k = 0.6, and the switching frequency is 25 kHz. For the inductance L = 250 μH , the filter capacitance C = 220 μF and for average load current I = 1.5 A, determine (i) the average output voltage, (ii) the capacitor ripple voltage ΔV_C, and (iii) peak to ripple current of inductor ΔI.

4. Attempt any *one* part of the following: 7 x 1 = 7

(a) The beta (β) of a bipolar transistor as shown in figure (1) varies from 10 to 60. The load resistance is $R_C = 5\ \Omega$. The dc supply voltage is $V_{CC} = 100$ V and the input voltage to the base circuit is $V_B = 8$ V. If $V_{CE}(sat) = 2.5$ V and $V_{BE}(sat) = 1.75$ V, find (i) the value of R_B that will result in saturation with an over drive factor of 20, and (ii) the power loss in transistor.

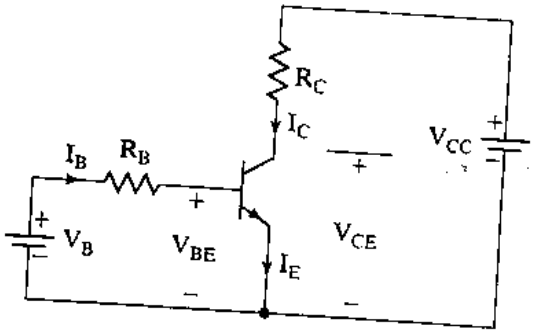

(b) A single phase half bridge inverter has a resistive load of 3 Ω. The dc input voltage is 30 V. Find: (i) the rms value of fundamental component of output voltage, (ii) output power, (iii) the average current of each thyristor, and (iv) peak current of each thyristor

5. Attempt any *one* part of the following: 7 x 1 = 7

(a) Discuss three phase inverter with 120° conduction of a thyristor for star connected resistive load. Also draw the output phase voltage waveform for any one phase and discuss its merits & demerits.

(b) Explain the necessity of harmonics reduction in a inverter circuit. Describe harmonics reduction technique by transformer connections. Also enumerate the drawbacks of this method.

6. Attempt any *one* part of the following: 7 x 1 = 7

(a) Explain principle of step up chopper and obtain output voltage expression in terms of duty cycle with suitable circuit diagram and waveform.

(b) With relevant diagram explain the role of snubber circuit.

7. Attempt any *one* part of the following: 7 x 1 = 7

(a) Discuss with circuit diagram and relevant waveforms basic series resonant inverter and also derive the mathematical expressions for capacitor voltage.

(b) What are advantages of ZCS in a converter circuit. Discuss L-type ZCS resonant converter. Also derive the expression capacitor voltages during each mode of operations.