Printed Pages:03 **Sub Code:KCA201**

Paper Id: 238045 **Roll No.** | | | | | | | | | | |

MCA

(SEM II) THEORY EXAMINATION 2022-23

THEORY OF AUTOMATA & FORMAL LANGUAGES

Time: 3 Hours ***Total Marks: 100***

Note: Attempt all Sections. If require any missing data; then choose suitably.

SECTION A

1. Attempt *all* questions in brief. **2 x 10 = 20**

(a) Differentiate between alphabets and strings.

(b) What do you understand by dead state in transition diagram.

(c) Design a regular expression that accepts all strings containing at exactlytwo a's over the input (a + b)*.

(d) Elaborate the principal used in pumping lemma.

(e) What is unit production?

(f) What do you mean by ambiguous grammar?

(g) Define"Instantaneous Description (ID)" of PDA.

(h) What is need of special initial stack symbol in PDA?

(i) Differentiate between Recursive and Recursively Enumerable Languages.

(j) What do you mean by Halting Problem of Turing Machine?

QP23EP2_290 | 01-08-2023 08:48:05 | 117.55.242.132

SECTION B

2. Attempt any *three* of the following: **10x3=30**

(a) Discuss transition function of NFA. Convert the given NFA into DFA. Also write tuples of corresponding DFA.

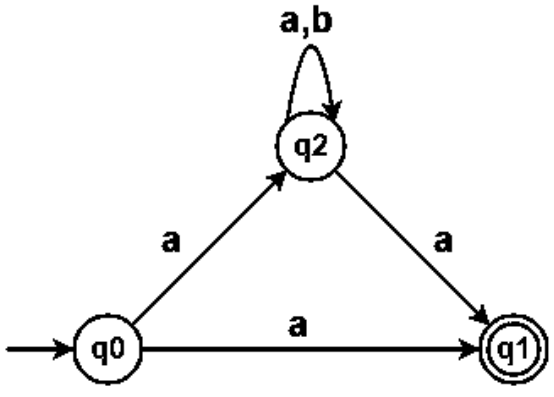

(b) What do you mean by derivation of grammar. Productions of a grammar 'G' are defined as:

S → 0B | 1A

A → 0 | 0S | 1AA

B →1 | 1S | 0BB.

For the string 00110101, explore (a) the leftmost derivation, (b) the rightmost derivation. (c) the leftmost derivation tree, (d) the rightmost derivation tree.

QP23EP2_290 | 01-08-2023 08:48:05 | 117.55.242.132

(c) What do you mean by left linear and right linear grammar? Write down the grammar for given DFA.

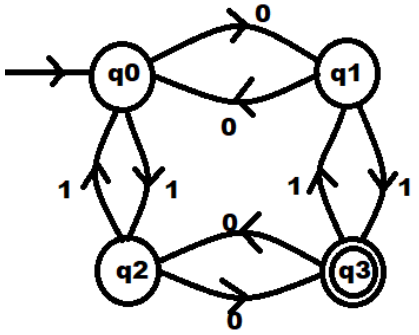

(d) Design a PDA that will accepts all even length palindromes over the input symbols {a,b}*. Also justify your transition diagram for the string w="abbaaaabba".

(e) Define Post's Correspondence Problem (PCP) and Modified PCP with itsapplications. Find a PCP solutions of the lists x=(b,bab^3,ba) andy=(b^3,ba,a).

SECTION C

3. Attempt any *one* part of the following: 10x1=10

(a) Define Deterministic Finite Automata (DFA). Mathematically represent a DFA that will accept all strings of 0's and 1's except '101' as a substring.

(b) What do you understand by minimum state automation? Construct a minimum state automation for the given transition diagram.

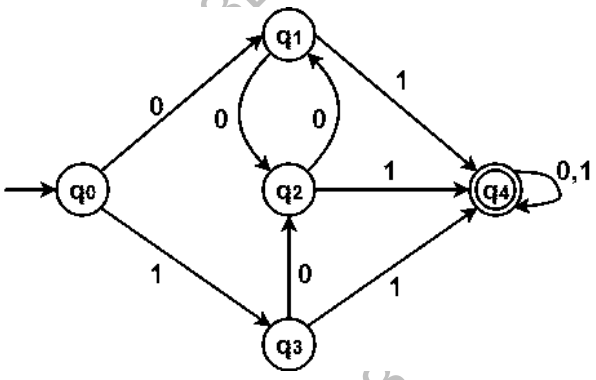

4. Attempt any *one* part of the following: 10x1=10

(a) What do you mean by Regular Languages? Discuss the closure properties of Regular Languages.

(b) State Arden Theorem. Find out the regular expression for the given transition diagram.

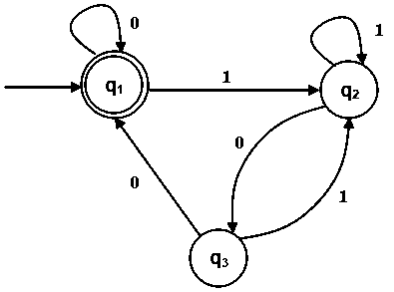

QP23EP2_290 | 01-08-2023 08:48:05 | 117.55.242.132

5. Attempt any *one* part of the following: 10x1=10

(a) Discuss Chomsky Hierarchy in detail.

(b) What do you mean by Chomsky Normal form (CNF)? After simplification convert the given productions ofCFG into CNF.
$S \rightarrow ABA$
$A \rightarrow aA \mid \varepsilon$
$B \rightarrow aB \mid \varepsilon$

6. Attempt any *one* part of the following: 10x1=10

(a) What do you mean by Push Down Automata (PDA)? Discuss deterministic PDA with suitable example.

(b) Using two stacks construct a PDA that will accept the Languages$L = \{ a^n b^n c^n : n \geq 1\}$.

7. Attempt any *one* part of the following: 10x1=10

(a) Define Turing Machine. Design a Turing Machine that will convert lower case characters to upper case characters for the inputs {a, b}*.

(b) Write short note on following:
(i) Variants of Turing Machines
(ii) Church's Thesis

QP23EP2_290 | 01-08-2023 08:48:05 | 117.55.242.132

QP23EP2_290 | 01-08-2023 08:48:05 | 117.55.242.132