Name: Student University Roll No.:	Printed Pages:2

School of Engineering

Second Sessional Examination, Even Semester (AS: 2022-23)

AI 11,12,13, CEM-1 B. Tech: CS (19 to 10) Year:1st Semester: 1st IOT BC-1

Course Title: Engineering Mechanics Course Code: BME3201	Max Marks: 60 Time: 3 *hr*

Instructions if any: Read the question Carefully.

	SECTION 'A' Q.N.1. Attempt all parts of the following:	Course Objective	Marks
a)	State the Lami's Theorem.	CO1	1
b)	Explain about static friction.	CO1	1
c)	What is point of contraflexure?	CO2	1
d)	Write condition of different type of truss.	CO2	1
e)	State perpendicular axis theorem.	CO3	1
f)	State work energy theorem.	CO3	1
g)	Define lateral strain.	CO4	1
h)	Write factor of safety.	CO4	1

	SECTION 'B' Q.N.2. Attempt any two parts of the following:	Course Objective	Marks
a)	A cord supported at A and B carries a load of 10 KN at D and a load of W at C, find the value of W so that CD remains horizontal. 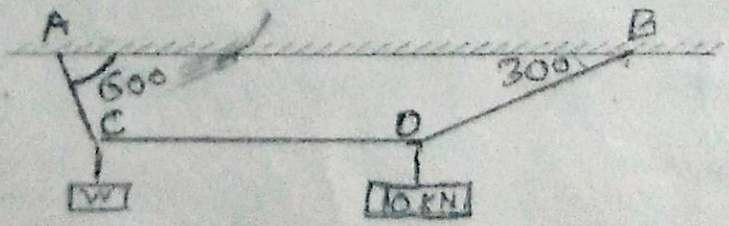	CO1	6
b)	Draw the shear force and bending moment diagrams for the overhanging beam shown in fig 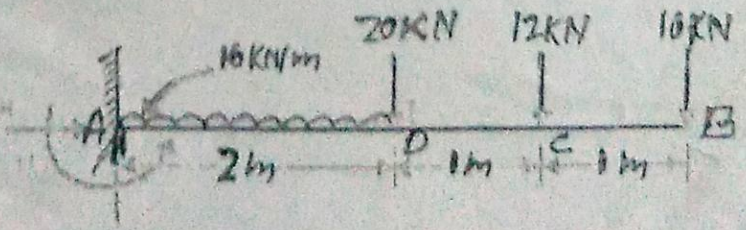	CO2	6

c)	Find the polar moment of inertia of the I-section shown in fig. 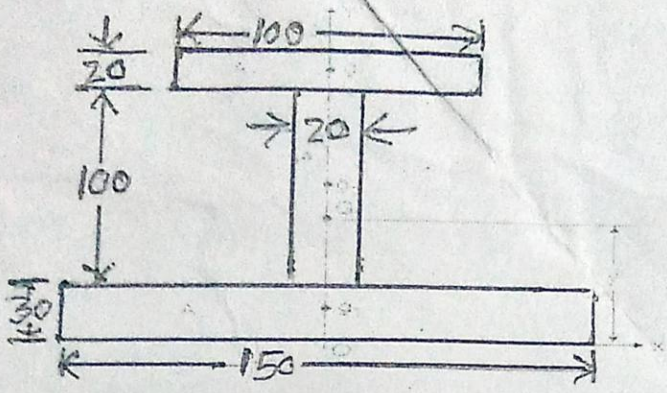 	CO2	6
d)	A 400 mm long bar has rectangular cross-section 10 mm × 30 mm. This bar is subjected to (i) 15 kN tensile force on 10 mm × 30 mm faces, (ii) 80 kN compressive force on 10 mm × 400 mm faces, and (iii) 180 kN tensile force on 30 mm × 400 mm faces. Find the change in volume if E = 200 GPa and μ=0.3	CO3	6
	SECTION 'C'	**Course Objective**	**Marks**
Q.N.3. Attempt any Two part of the following:			
a)	What is friction? Derive the relation between tight side and slack side.	CO1	5
b)	Find the moment of 100 N force acting at B about point A as shown in Fig 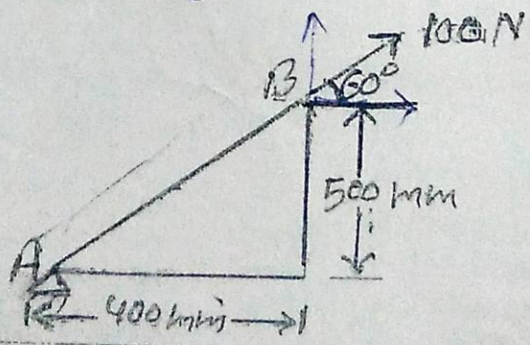 	CO1	5
c)	Block A weighing 1000 N rests over block B which weighs 2000 N as shown in Fig. Block A is tied to a wall with a horizontal string. If the coefficient of friction between A and B is 1/4 and that between B and the floor is 1/3 what value of force P is required to create impending motion	CO1	5

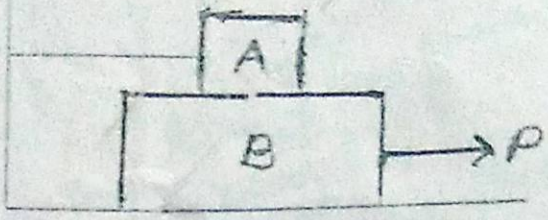

Q.N.4. Attempt any Two part of the following:			
a)	Derive the relation between load intensity, shear force and bending moment.	CO2	5
b)	Determine the forces in all the members of a cantilever truss shown in fig. 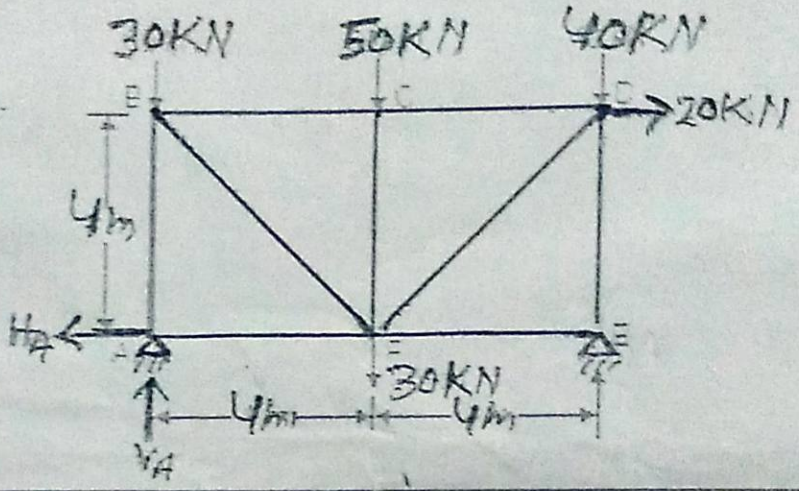	CO2	5
c)	Determine reaction force at A and B for fig 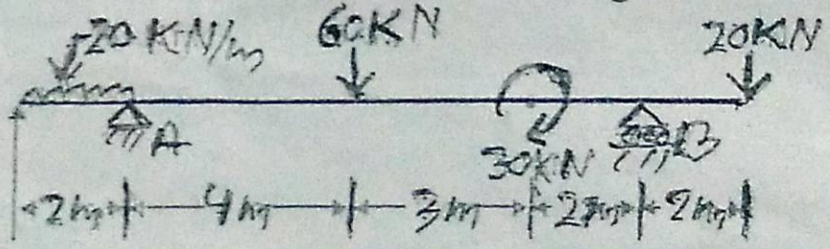	CO2	5
Q.N.5. Attempt any Two part of the following:			
a)	Derive an expression for the moment of inertia of a Triangular Section of base b and height h about the base.	CO3	5

b)	State parallel axis theorem and find centroid of I section about centroidal axis. 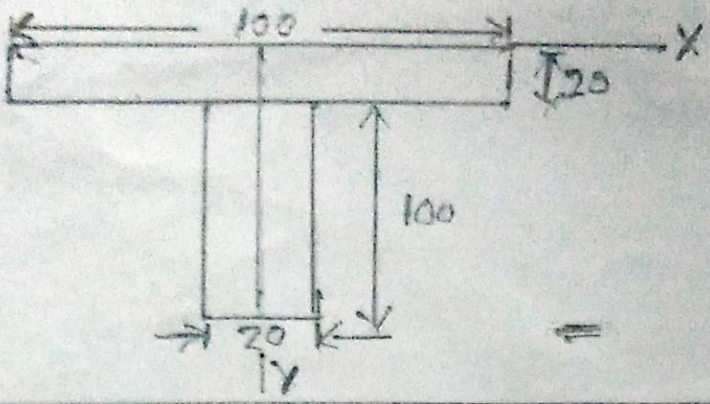 	CO3	5
c)	The motion of a particle is given by $a = t^3 - 3t^2 + 5$, where a is the acceleration in m/s^2 and t is time in second. The velocity of the particle at t= 1 s is 6.25 m/s and the displacement is 8.30 m. Calculate the displacement and velocity at t = 2 s.	CO3	5
Q.N.6. Attempt any Two part of the following:			
a)	Draw and Explain stress-strain curve for ductile material.	CO4	5
b)	A 2m long steel bar having uniform diameter of 40 mm for a length of 1500mm and in the next 500mm its diameter gradually reduces from 40mm to 20 mm. Determine elongation of this rod when subjected to an axial tensile load of 200kN. Assume E=200 GPa.	CO4	5
c)	Define the following terms: (i) Proof Resilience (ii) Bulk Modulus (iii) Poisson's Ratio (iv) Thermal (Temperature) Stress (v) Strain Energy	CO4	5

Table 1: Mapping between COs and questions

COs	Questions Numbers	Total Marks
CO1	1-a,1-b,2-a,3-a,3-b,3-c	23
CO2	1-c, 1-d, 2-b,,4-a,4-b,4-c	23
CO3	1-e,1-f, 2-c,5-a,5-b,5-c	23
CO4	1-g,1-h, 2-d, 6-a,6-b,6-c	23